1 / Cot node - complete wiring (one per node, x2)

ESP32-C3 SuperMini + INMP441 + LX-LCBST + switch - no battery sense, no status LEDs

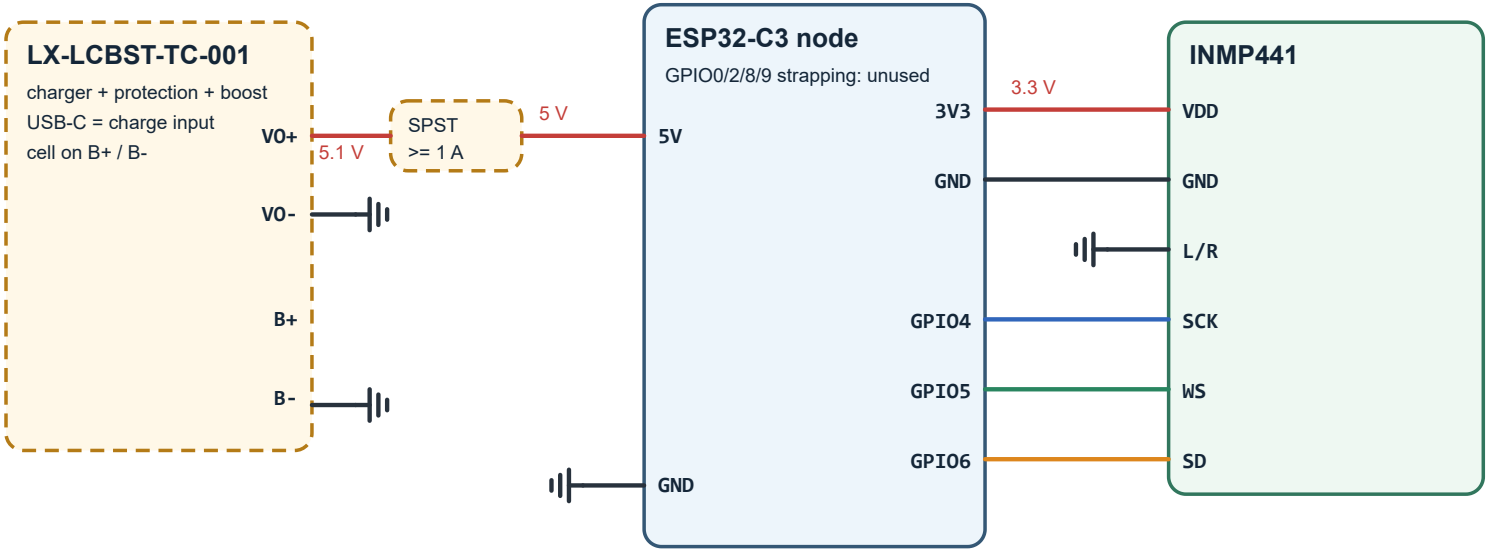

No battery sense and no status LEDs (D-83).

B+ and B- carry the cell and nothing else: no divider, no ADC read, no telemetry field, no battery text on the panel.

GPIO3, GPIO7 and GPIO10 are free.

Mic placement - the INMP441 is fixed-gain: mount it on the cot frame on a stiff lead, at least 30 cm from where the baby's head will be - never loose on the mattress.

Verified on the live system: mic wiring (3V3 / GND / L/R→GND, GPIO4 SCK, GPIO5 WS, GPIO6 SD) and the node firmware.

No battery sense and no LEDs (D-83). The 220 kΩ / 100 kΩ divider, its 100 nF, the GPIO10 blue link LED and the GPIO7 amber SOC LED have all been removed: the node does not read its cell, and the hub's panel already shows which cots are answering. The node keeps sending the heartbeat and the hub keeps answering it - only the LED that showed the answer is gone, and the node prints it on the serial console instead. **Do not fit a divider or an LED on this board.** GPIO1, GPIO3, GPIO7 and GPIO10 are free.

Cell (D-81): an 18650 Li-ion cell, 3.7 V nominal / 4.2 V full, 3000 mAh or better, **protected**, in a holder. A node sits on a cot frame within a baby's reach, so the steel can is the point - it cannot be punctured. **Never LiFePO4**: the module charges to 4.2 V and an LFP cell tops out at 3.65 V.

Test cry: the hub refuses a saturated window ("the window is CLIPPED"), so keep the phone at least 15 cm from the mic when you play a test cry through it.

Every ⏚ symbol is the same net: the module's VO- (battery negative through the module's protection FET). Wires join only where a dot is drawn. Pin names, not header positions. Repeat identically for node 2.

2 / Main hub - complete wiring (x1)

ESP32-S3-DevKitC-1 N16R8 + 2.8" ILI9341 (backlight on 3V3, always on) + LX-LCBST + switch - no battery sense, no status LEDs

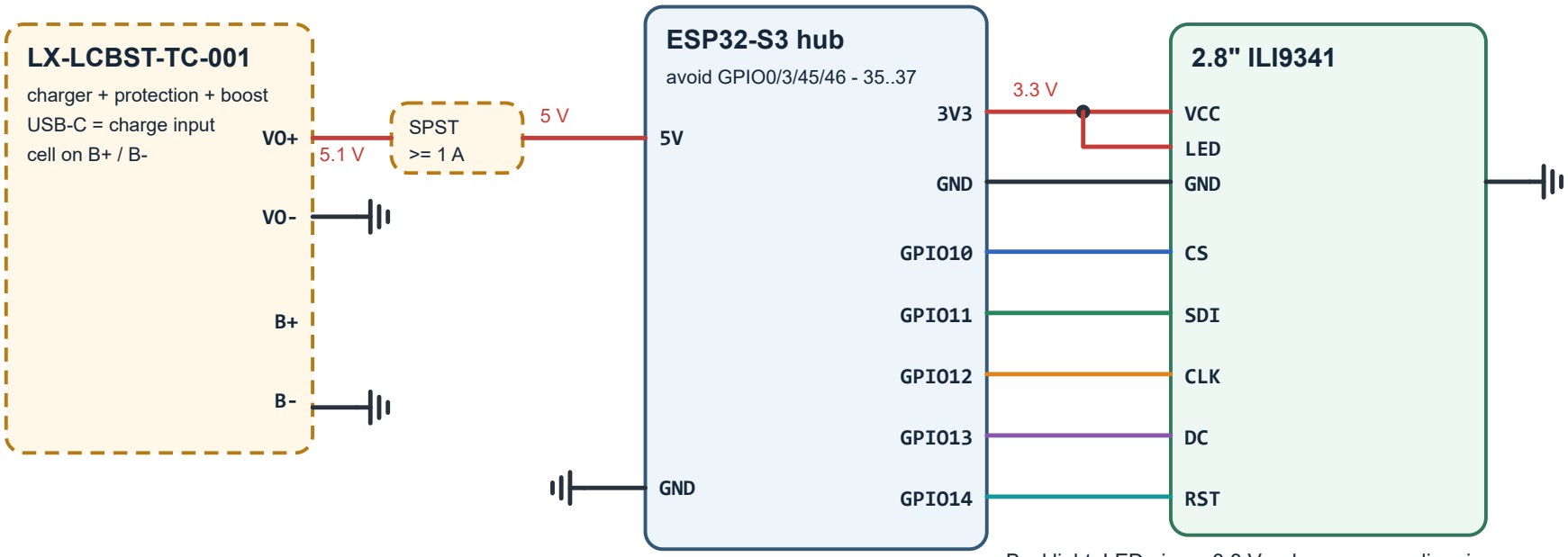

Backlight: LED pin on 3.3 V - always on, no dimming.

No battery sense and no status LEDs (D-83).

GPIO1 (ADC), GPIO17 and GPIO2 are free.

Verified on the live system: the TFT signal pins (CS 10, MOSI 11, SCK 12, DC 13, RST 14, VCC 3V3, GND). The panel's LED (backlight) pin is tied to the same 3.3 V net as the panel's VCC pin, so the backlight is permanently on: the glass cannot be dimmed and the display has no sleep mode. The hub firmware still drives GPIO4 as a backlight output (hub_display.c: PIN_BL 4, ili9341_backlight_set), so GPIO4 is left unconnected and the brightness control on the panel has no effect on the glass.

No battery sense and no LEDs (D-83). The GPIO1 divider (ADC1_CH0), the GPIO2 blue BLE-status LED and the GPIO17 amber SOC LED have been removed before they were fitted. The hub does not measure its own cell and drives no indicator: the panel is the only display, and the wearable tells the caregiver what the hub is doing over BLE. **Do not fit a divider or an LED on this board.** GPIO1, GPIO2 and GPIO17 are free.

The hub's peak current with TFT + radios is unmeasured - confirm the LX-LCBST holds 5.1 V during bursts before trusting it here.

Cell (D-81): an 18650 Li-ion cell, 3.7 V nominal / 4.2 V full, 3000 mAh or better, **protected**, in a holder - the hub draws the most current of any unit, so it is the cell most worth sizing carefully. **Never LiFePO4**: the module charges to 4.2 V and an LFP cell tops out at 3.65 V.

GPIO35-37 are the Octal PSRAM bus - never wire them. The TFT signal wiring is the recorded working one for the existing module. The backlight is on 3.3 V and GPIO4 is not used. Every ⏚ symbol is the same net: the module's VO-.

3 / Caregiver wearable - complete wiring (x1)

ESP32-C3 SuperMini + SSD1306 OLED + LX-LCBST + switch + BC547 haptic drive (status on OLED)

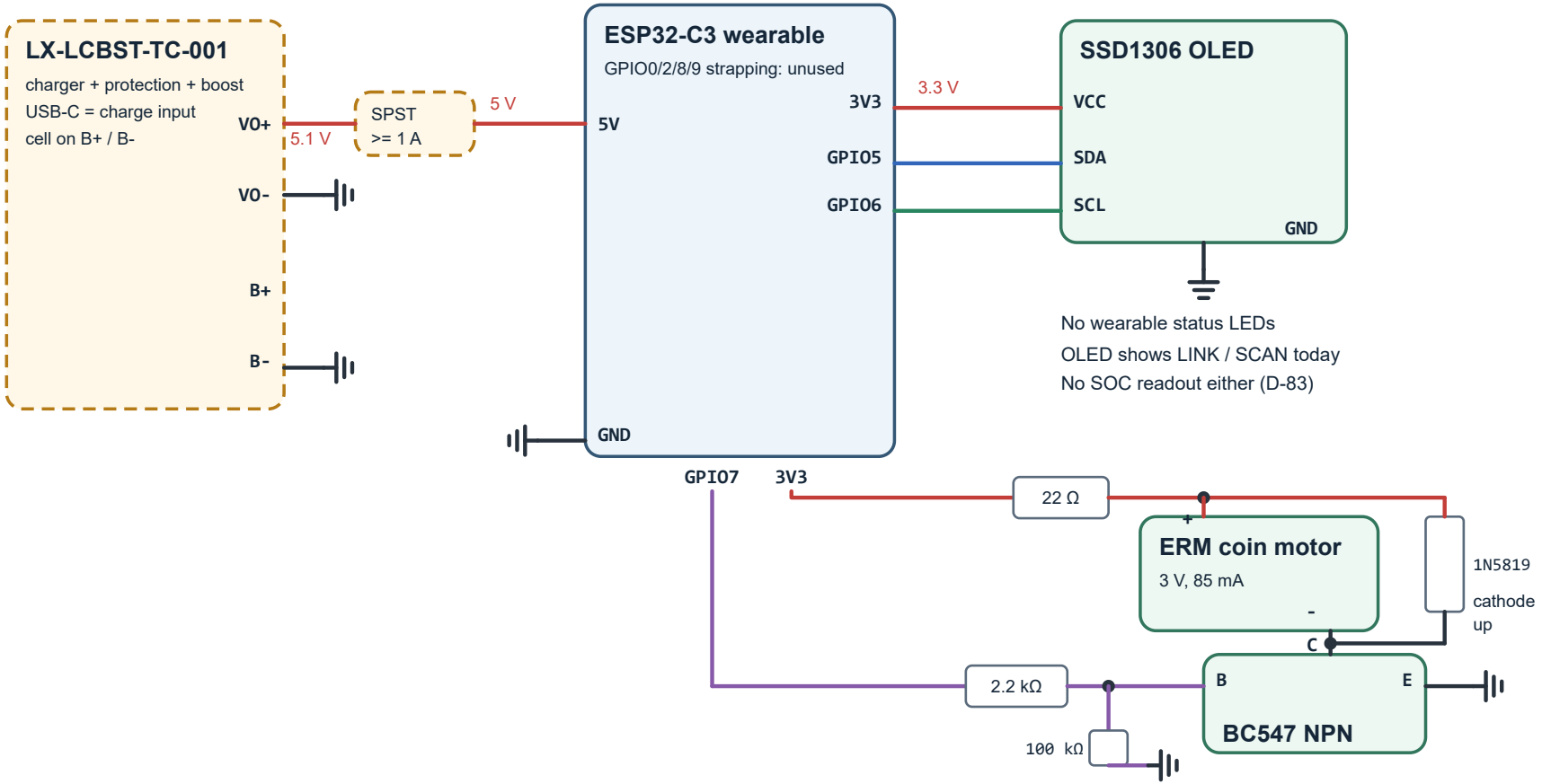

No battery sense and no LEDs (D-83). The 220 kΩ / 100 kΩ divider and its 100 nF are withdrawn, and the wearable has no indicator of any kind: the OLED carries LINK and SCAN, and says nothing about the cell. **Do not fit a divider or an LED on this board.** GPIO3 is free. Motor: the fitted stall cap is **22 Ω** (not the 10 Ω this diagram used to show) - it caps the stall current at 3.3 V ÷ (R + 22 Ω) - about 56 mA for a 37 Ω coin ERM, inside the BC547's 100 mA. It is the safer value, but it drops about 1.2 V of the rail, so the motor sees about 2.1 V and the buzz is softer than a 10 Ω would give. GPIO7 drives the switch in 250 ms pulses. The OLED carries the state and the firmware already shows LINK or SCAN on it.

Cell (D-81): a 1000 mAh Li-Po *pouch* here, not an 18650 - an 18650 is 18 x 65 mm and 48 g and cannot go on a wrist, while the node and the hub take an 18650 because a cot frame can puncture a pouch. Same chemistry: 3.7 V nominal, 4.2 V full. **Never LiFePO4.** The module's ~1 A charger must come down to ~400-500 mA for this cell.

Runtime (D-82): 5.1 V boost, then the board's linear regulator down to 3.3 V - which passes current, not power, so the cell supplies roughly 1.8x the 3.3 V load current. That projects to about six hours on a 1000 mAh pouch; a projection, not a measurement. Feeding the 3V3 pin from a 3.3 V buck-boost would roughly double it.

Every ⏚ symbol is the same net; wires join only where a dot is drawn. The BC547 emitter is the motor's ground, and the flyback sits across the motor with the cathode up.

4 / CryNet system - power chain and links

Every unit has its own battery and its own ground. No wire ever joins two units.

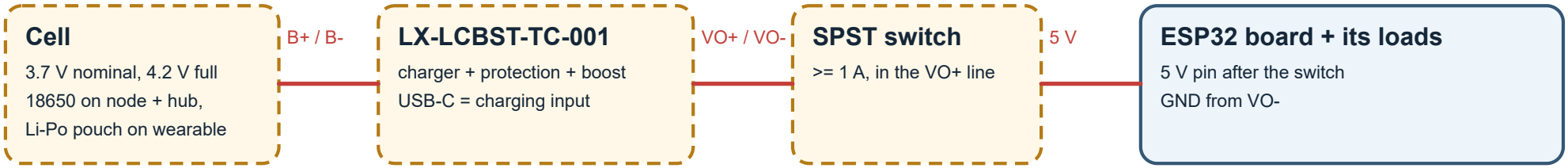

One chain in all four units - only the loads differ:

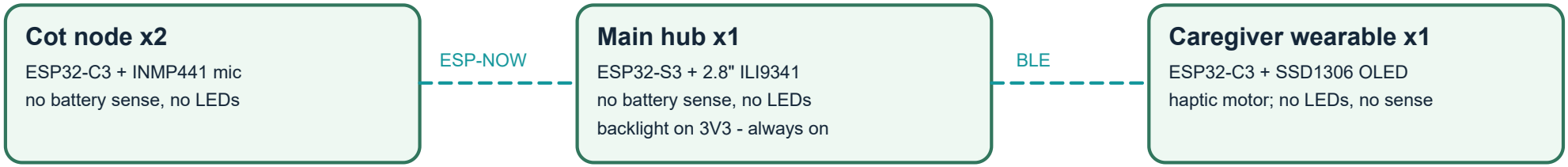

Rules every unit follows:

1 - Switch OFF before charging. The cell still charges on B+/B-.

2 - Set the boost trimpot to 5.1 V with a meter before any board.

3 - Never power a board from USB and the boost at the same time.

Dashed teal = wireless link, no wire. Solid = a real conductor.

Proposed, bench-validation pending: the whole battery chain. **No unit has a battery sense or a status LED (D-83)** - the node's divider and its GPIO10 blue link LED, the node's GPIO7 amber SOC LED, the hub's GPIO1 divider, the hub's GPIO2 BLE LED and the hub's GPIO17 SOC LED have all been removed. The wearable has no LEDs either - the OLED carries the state (it shows LINK or SCAN today). The hub's panel is the only display in the system, so nothing anywhere will warn the caregiver that a cell is nearly flat.

Cells (D-81): an 18650 (3.7 V, 4.2 V full, 3000 mAh) on each node and the hub, because a node sits on a cot frame within a baby's reach and needs a cell that cannot be punctured; a 1000 mAh Li-Po pouch on the wearable, because an 18650 is 18 x 65 mm and 48 g and cannot go on a wrist. **Never LiFePO4** - the module charges to 4.2 V and an LFP cell tops out at 3.65 V. The module's ~1 A charger must come down to ~400-500 mA for the wearable's pouch (1 C is too high for it).

Runtime (D-82): the chain boosts to 5.1 V and the board drops that to 3.3 V through a *linear* regulator, which passes current rather than power - so the cell supplies roughly 1.8x the 3.3 V load current. That projects to about six hours for the wearable on a 1000 mAh pouch. These are projections, not measurements. Feeding the 3V3 pin from a 3.3 V buck-boost would roughly double it - a change to the power chain, deferred to the bench.

5 / LX-LCBST-TC-001 - pad map and bench procedure

From the user's front-and-back photograph - Chinese silk text translated

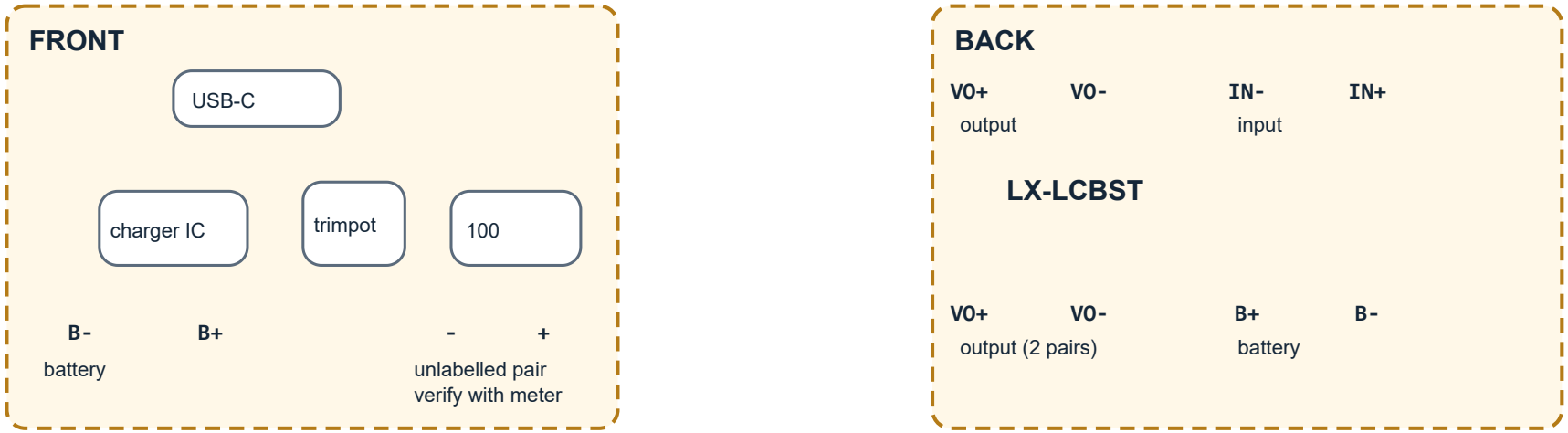

Bench procedure, before any ESP32 is connected:

1 - Cell on B+/B-: turn the trimpot until VO+/VO- reads 5.1 V on a meter, no load.

2 - USB-C in: measure the charge current with a series meter - the cell must allow it.

3 - Confirm the charge ends at 4.2 V.

4 - Switch off: confirm the load is dead and measure the battery drain (boost quiescent unknown).

5 - Run one node and compare it with the USB baseline.

No T pad on this board - the listing's T-shorting notes belong to other variants. Never short anything.

Unknown until measured: the actual charge current (the program resistor is unreadable in the photo), the boost quiescent drain when off, the protection thresholds, and what the front - / + pair connects to. Buy ONE module for validation; only then buy the remaining three (plus the wearable's, pending the same check).

Pad map from the user's photograph, 2026-11-02. Photo evidence over listing claims: the listing omitted the charge current, the output rating and the efficiency. The trimpot sets the boost output, 4.2-28 V.